REVISIONS			
REV	DESCRIPTION	DATE	BY

HOLE IN PCB: ø2.5mm
PCB THICKNESS: 1.4~1.6mm

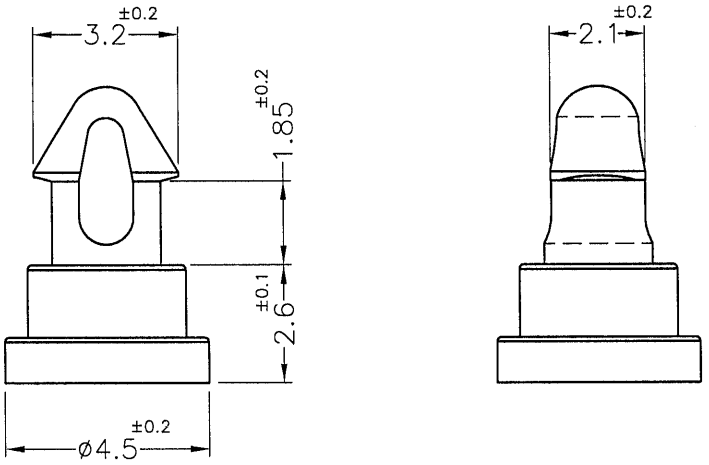

NOTE:MADE OF EQUIVALENT MATERIAL.
均可使用同等材質.

康揚企業股份有限公司
KANG YANG HARDWARE ENTERPRISE CO., LTD.
康揚塑膠(東莞)有限公司
KANG YANG PLASTIC(DONG GUAN)CO.,LTD.
康哲電腦配件(吳江)有限公司
KANG CHE COMPUTER COMPONENTS(WUJIANG) CO.,LTD.
ISO 9001
ISO 14001
QC 080000

TITLE: SPACER SUPPORT			SPEC. DWG.
MATERIAL: NYLON 66 UL94V-0			DATE: 2017.05.22
FINISH:			DRAWN: C.S.L
COLOR: NATURAL(WHITE)			CHECK: 薛梅
UNLESS OTHERWISE SPECIFIED TOLERANCE: SEE ABOVE			APPROVED:
PART NUMBER: MAM-2.6V0	DRAWING NUMBER: MAM-2.6		
SIZE: A4	SCALE: 6:1	UNIT: mm	REV: A