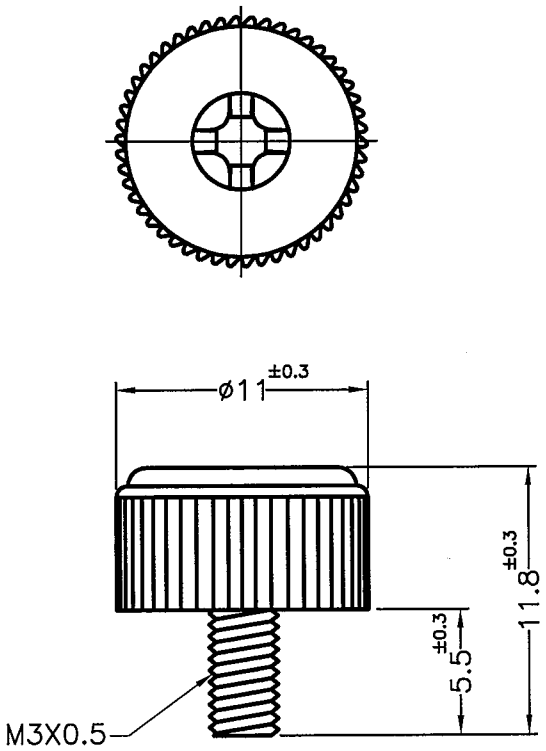

PART NO.	COLOR
GPE3-5.5(B)	BLACK
GPE3-5.5(G)	GRAY

NOTE: 1. THE COLOR BATCH TEST REPORT IS ONLY FOR FIRST LOT TEST.
色母環保檢測報告,僅提供原始測試報告.
2. IT IS NORMAL IF IT IS SHRINKING.
內縮為正常現象.
3. MADE OF EQUIVALENT MATERIAL.
均可使用同等材質.

康揚企業股份有限公司
KANG YANG HARDWARE ENTERPRISE CO., LTD.
康揚塑膠(東莞)有限公司
KANG YANG PLASTIC(DONG GUAN)CO.,LTD.
康哲電腦配件(吳江)有限公司
KANG CHE COMPUTER COMPONENTS(WUJIANG)CO.,LTD.
ISO 9001
ISO 14001
QC 080000
IATF 16949

PROPRIETARY AND CONFIDENTIAL
THE INFORMATION CONTAINED IN THIS DRAWING IS THE SOLE PROPERTY OF KANG YANG HARDWARE ENTERPRISE CO. ANY REPRODUCTION IN PART OR AS A WHOLE WITHOUT THE WRITTEN PERMISSION OF KANG YANG HARDWARE ENTERPRISE CO. IS PROHIBITED.

DO NOT SCALE DRAWING

DATE 2010.01.15	TITLE SCREW	DWG. NO. GPE3-5.5	PART NO. SEE ABOVE
DRAWN JIM	PLASTIC / SCREW MATERIAL PC+ABS / STEEL		
CHECKED 林祺翔	PLASTIC COLOR SEE ABVOE / SCREW FINISH NI PLATED	SIZE A4	SPEC. DWG	REV D
APPROVED Kang	UNLESS OTHERWISE SPECIFIED TOLERANCE: SEE ABOVE	SCALE: 3:1	UNIT mm	SHEET 1 OF 1