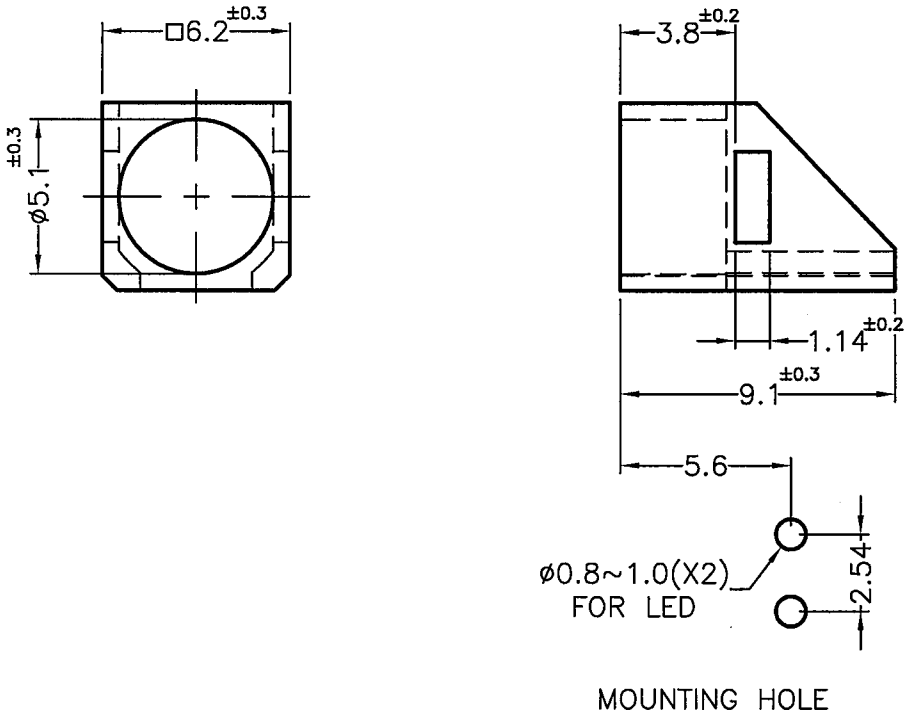

NOTE:MADE OF EQUIVALENT MATERIAL.
均可使用同等材質.

康揚企業股份有限公司
KANG YANG HARDWARE ENTERPRISE CO., LTD.
康揚塑膠(東莞)有限公司
KANG YANG PLASTIC(DONG GUAN)CO.,LTD.
康哲電腦配件(吳江)有限公司
KANG CHE COMPUTER COMPONENTS(WUJIANG)CO.,LTD.
ISO 9001
ISO 14001
QC 080000
IATF 16949

PROPRIETARY AND CONFIDENTIAL
THE INFORMATION CONTAINED IN THIS DRAWING IS THE SOLE PROPERTY OF KANG YANG HARDWARE ENTERPRISE CO. ANY REPRODUCTION IN PART OR AS A WHOLE WITHOUT THE WRITTEN PERMISSION OF KANG YANG HARDWARE ENTERPRISE CO. IS PROHIBITED.

DO NOT SCALE DRAWING

DATE 2002.10.15	TITLE LED SPACER SUPPORT	DWG. NO. LED-505	PART NO. LED-505
DRAWN JASON	MATERIAL PC UL94V-2		
CHECKED 林祺翔	COLOR TRANSPARENT / FINISH	SIZE A4	SPEC. DWG. / REV A
APPROVED Kang	UNLESS OTHERWISE SPECIFIED TOLERANCE: SEE ABOVE	SCALE: 4:1	UNIT mm / SHEET 1 OF 1