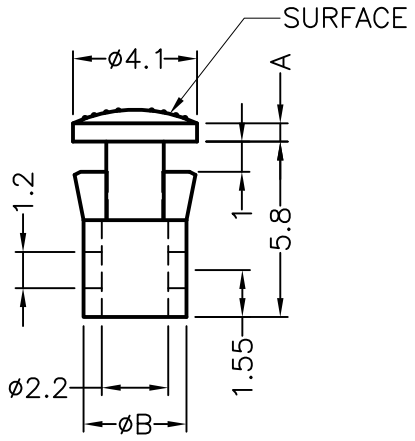

CHASSIS ø3.5
THICKNESS 0.8~1.0

PART.NO	A	B	SURFACE
LEU-1	1.1	3.4	RING

數值請依照目錄